MEAN WELL

Your Reliable Power Partner

RQ-120 series
POWER SUPPLY

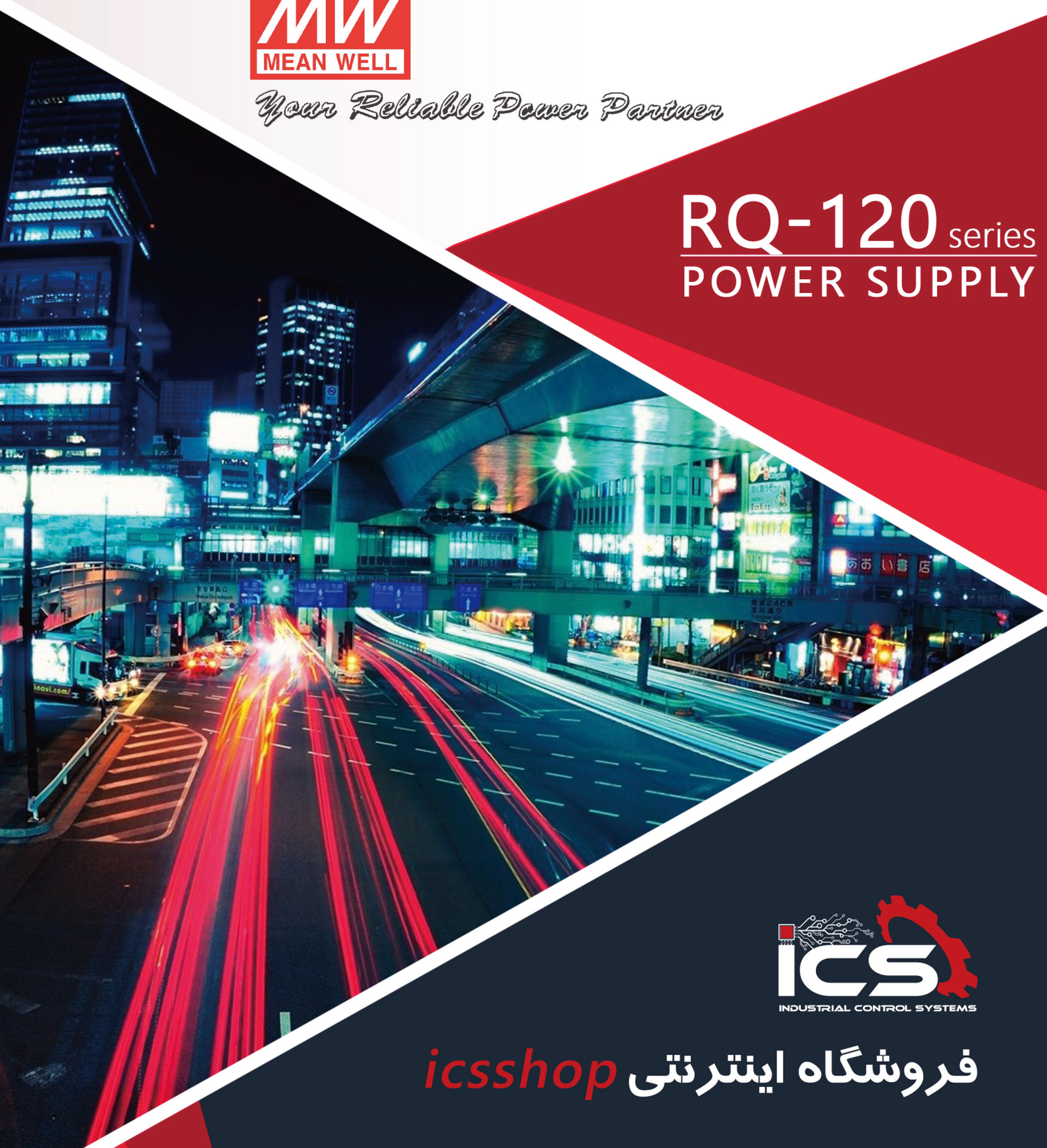

ICS
INDUSTRIAL CONTROL SYSTEMS

فروشگاه اینترنتی icsshop

icsshop | icsshop.ir | www.icsshop.ir

125W Quad Output Switching Power Supply RQ-125 series

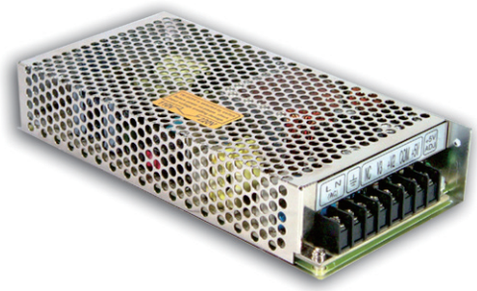

■ Features :

- Protections: Short circuit / Overload / Over voltage
- Cooling by free air convection
- LED indicator for power on
- 100% full load burn-in test
- All using 105℃ long life electrolytic capacitors
- Withstand 300VAC surge input for 5 second
- High operating temperature up to 70℃
- Withstand 5G vibration test
- High efficiency, long life and high reliability
- 3 years warranty

SPECIFICATION

UL62368-1 EN62368-1 IEC62368-1 TPTC004

MODEL		RQ-125B				RQ-125C				RQ-125D			
OUTPUT	OUTPUT NUMBER	CH1	CH2	CH3	CH4	CH1	CH2	CH3	CH4	CH1	CH2	CH3	CH4
	DC VOLTAGE	5V	12V	-5V	-12V	5V	15V	-5V	-15V	5V	12V	24V	-12V
	RATED CURRENT	11A	4.5A	1A	0.5A	10A	4A	1A	0.5A	8A	2.5A	2A	0.5A
	CURRENT RANGE Note.6	0 ~ 12A	0 ~ 4.5A	0 ~ 1A	0 ~ 1A	0 ~ 12A	0 ~ 4A	0 ~ 1A	0 ~ 1A	0 ~ 12A	0 ~ 4A	0 ~ 2.5A	0 ~ 1A
	RATED POWER Note.6	120W				122.5W				124W			
	RIPPLE & NOISE (max.) Note.2	80mVp-p	120mVp-p	80mVp-p	80mVp-p	80mVp-p	120mVp-p	80mVp-p	80mVp-p	80mVp-p	120mVp-p	150mVp-p	80mVp-p
	VOLTAGE ADJ. RANGE	CH1: 4.75 ~ 5.5V				CH1: 4.75 ~ 5.5V				CH1: 4.75 ~ 5.5V			
	VOLTAGE TOLERANCE Note.3	±2.0%	+10,-1%	+6,-10%	±5.0%	±2.0%	+10,-1%	+6,-10%	±5.0%	±2.0%	+10,-1%	±8.0%	±5.0%
	LINE REGULATION Note.4	±0.5%	±1.0%	±1.0%	±1.0%	±0.5%	±1.0%	±1.0%	±1.0%	±0.5%	±1.0%	±1.0%	±1.0%
	LOAD REGULATION Note.5	±1.0%	±3.0%	±6.0%	±2.0%	±1.0%	±3.0%	±6.0%	±2.0%	±1.0%	±3.0%	±6.0%	±2.0%
	SETUP, RISE TIME	500ms, 20ms/230VAC 1200ms, 30ms/115VAC at full load											
	HOLD UP TIME (Typ.)	25ms/230VAC 30ms/115VAC at full load											
INPUT	VOLTAGE RANGE	88 ~ 132VAC / 176 ~ 264VAC selected by switch 248 ~ 373VDC(Withstand 300VAC surge for 5sec. Without damage)											
	FREQUENCY RANGE	47 ~ 63Hz											
	EFFICIENCY (Typ.)	77%				78%				80%			
	AC CURRENT (Typ.)	3A/115VAC 2A/230VAC											
	INRUSH CURRENT (Typ.)	COLD START 50A/230VAC											
	LEAKAGE CURRENT	<2mA / 240VAC											
PROTECTION	OVERLOAD	110 ~ 150% rated output power											
		Protection type : Hiccup mode, recovers automatically after fault condition is removed											
	OVER VOLTAGE	CH1: 5.75 ~ 6.75V											
		Protection type : Hiccup mode, recovers automatically after fault condition is removed											
ENVIRONMENT	WORKING TEMP.	-25 ~ +70℃ (Refer to "Derating Curve")											
	WORKING HUMIDITY	20 ~ 90% RH non-condensing											
	STORAGE TEMP., HUMIDITY	-40 ~ +85℃, 10 ~ 95% RH											
	TEMP. COEFFICIENT	±0.03%/℃ (0 ~ 50℃)on +5V output											
	VIBRATION	10 ~ 500Hz, 5G 10min./1cycle, period for 60min. each along X, Y, Z axes											
SAFETY & EMC (Note 7)	SAFETY STANDARDS	UL62368-1, TUV EN62368-1, EAC TP TC 004 approved											
	WITHSTAND VOLTAGE	I/P-O/P:3KVAC I/P-FG:2KVAC O/P-FG:0.5KVAC											
	ISOLATION RESISTANCE	I/P-O/P, I/P-FG, O/P-FG:100M Ohms / 500VDC / 25℃/ 70% RH											
	EMC EMISSION	Compliance to EN55032 (CISPR32) Class B, EN61000-3-2,-3, EAC TP TC 020											
	EMC IMMUNITY	Compliance to EN61000-4-2,3,4,5,6,8,11, EN61000-6-2 (EN50082-2), heavy industry level, criteria A, EAC TP TC 020											
OTHERS	MTBF	203.1Khrs min. MIL-HDBK-217F (25℃)											
	DIMENSION	199*98*38mm (L*W*H)											
	PACKING	0.7Kg; 20pcs/14Kg/0.8CUFT											

NOTE

1. All parameters NOT specially mentioned are measured at 230VAC input, rated load and 25℃ of ambient temperature.
2. Ripple & noise are measured at 20MHz of bandwidth by using a 12" twisted pair-wire terminated with a 0.1uf & 47uf parallel capacitor.
3. Tolerance : includes set up tolerance, line regulation and load regulation.
4. Line regulation is measured from low line to high line at rated load.
5. Load regulation is measured from 20% to 100% rated load, and other output at 60% rated load.
6. Each output can work within current range. But total output power can't exceed rated output power.
7. The power supply is considered a component which will be installed into a final equipment. All the EMC tests are been executed by mounting the unit on a 360mm*360mm metal plate with 1mm of thickness. The final equipment must be re-confirmed that it still meets EMC directives. For guidance on how to perform these EMC tests, please refer to "EMI testing of component power supplies." (as available on http://www.meanwell.com)
8. Length of set up time is measured at cold first start. Turning ON/OFF the power supply very quickly may lead to increase of the set up time.
9. The ambient temperature derating of 3.5℃/1000m with fanless models and of 5℃/1000m with fan models for operating altitude higher than 2000m(6500ft).

■ Mechanical Specification

Case No. 902 Unit:mm

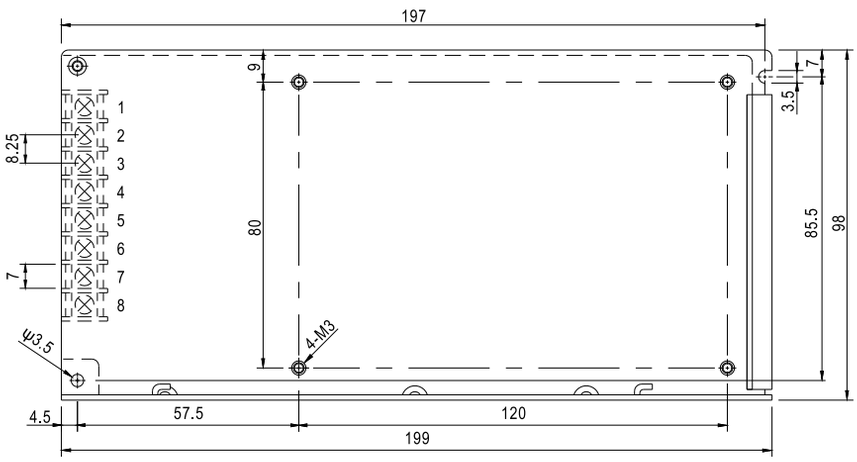

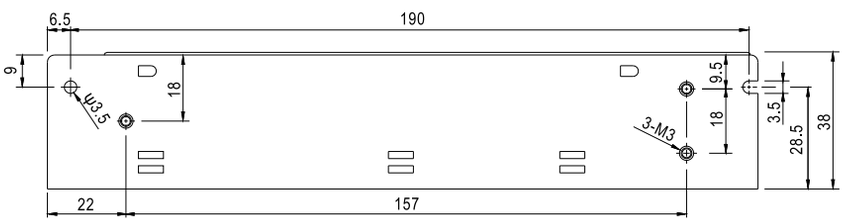

Terminal Pin No. Assignment

Pin No.	Assignment	Pin No.	Assignment
1	AC/L	5	DC OUTPUT V3
2	AC/N	6	DC OUTPUT +V2
3	FG ⏚	7	DC OUTPUT COM
4	DC OUTPUT -V4	8	DC OUTPUT +V1

■ Block Diagram

fosc : 60KHz

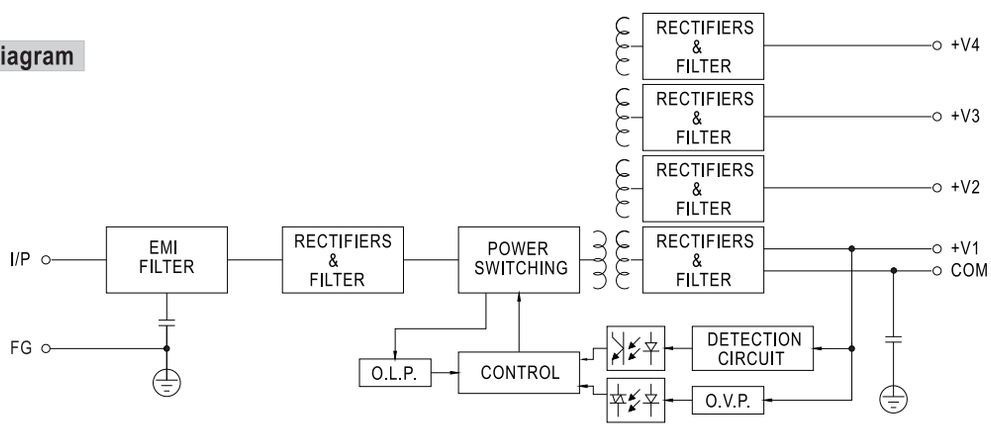

■ Derating Curve

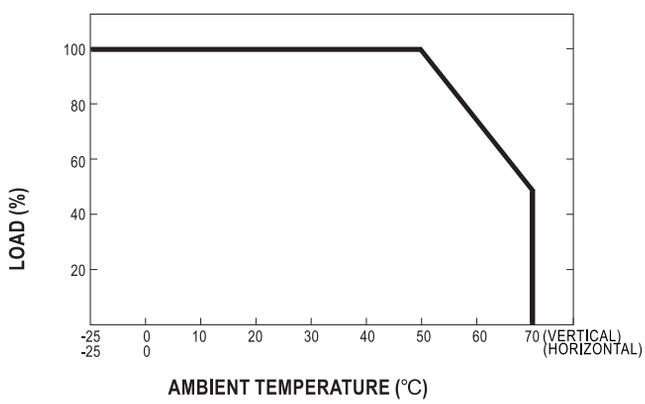

■ Static Characteristics